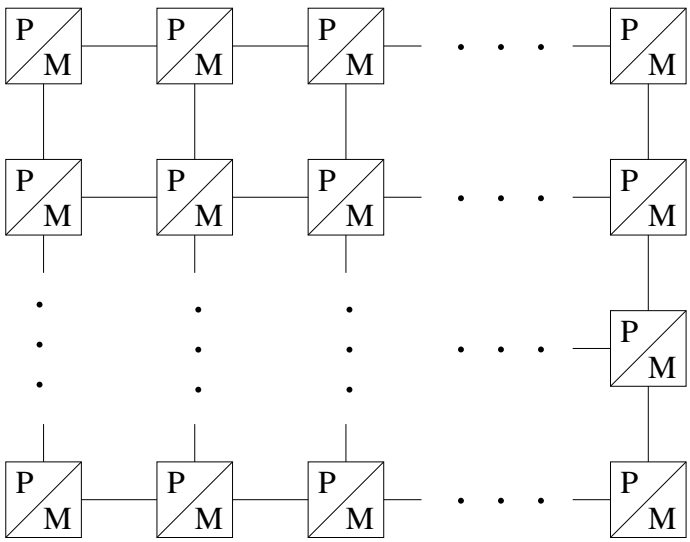
P
M